What are gas turbine power plants

April 30, 2020

A gas turbine power plant (GTPP) is a unit to generate electricity and thermal energy.
GTPP is based on one or more gas turbine units - power units mechanically connected to an electric generator and integrated by a control system into a single energy complex.

A gas turbine power plant may be used as a primary or backup power source in parallel with the power utility system. The GTPP may be placed both indoors and outdoors in a block module on a prearranged foundation.

Gas turbine power plants were widely spread worldwide in 50-60s of the last century, nowadays they are used less frequently because they have low efficiency (33-39%) and relatively high cost per kW of power compared, for example, with gas piston power plants.

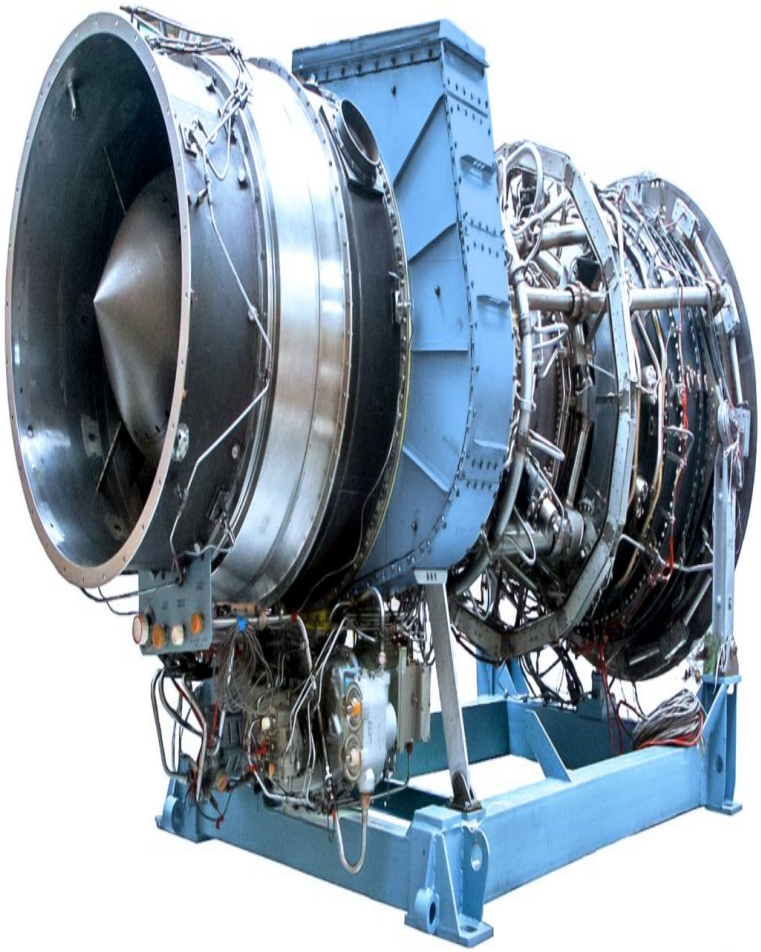

Physical form of the gas turbine unit

Principle of operation of GTPP

A gas turbine power plant works as follows: fuel (gas or diesel fuel) is fed into the combustion chamber, and compressed air is injected into it by a compressor. The gas mixed with air forms a fuel mixture that is pressurized into the compressor and ignited.

A jet of red-hot gas bursts out of the nozzle under high pressure, hits the turbine blades installed in several rows and begins to rotate it. The turbine shaft transmits torque to the rotor of the generator responsible for generating electricity, which, passing through a transformer, is transmitted to the energy consumer.

The exhaust gases are discharged through the exhaust pipe into the atmosphere or, if utilization is foreseen, into a heat exchanger or utilization boiler and used for space heating.

A simplified schematic diagram of a power unit of a gas turbine power plant is shown in the figure:

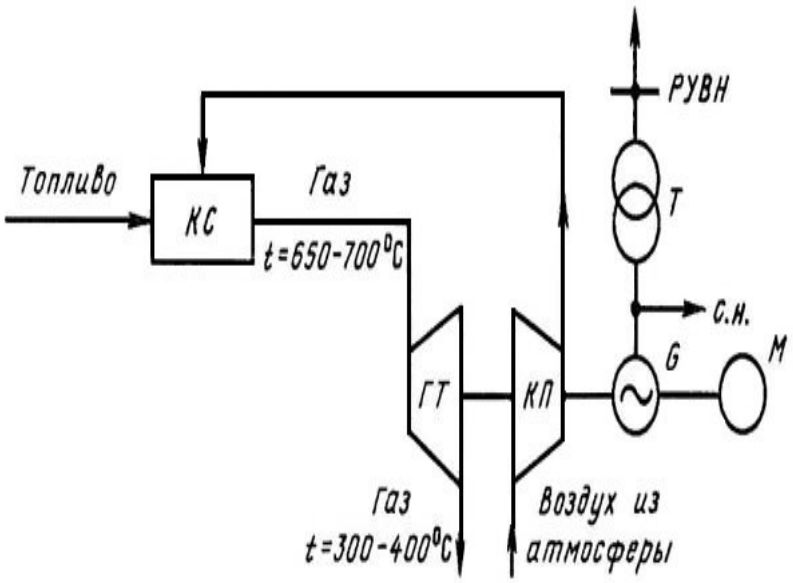

Principal process flow diagram of a power plant with gas turbines:
CC - combustion chamber; CP — compressor; GT - gas turbine; C - generator;
T - transformer; M - starting motor

Areas of use of gas turbine power plants

Gas turbine power plants can be used in various areas, from providing electricity to civil and agricultural buildings to industrial facilities and oil and gas fields.

The use of gas turbine power plants is expedient for remote consumers, especially when heating is required.

Types of gas turbine power plants

- **Stationary** - ones are mounted on a capital foundation. They are fitted with the most powerful turbines and electric generators.
- **Mobile** - represent mobile equipment.
  They are usually used to provide heat and electricity to remote sites, such as mining and oil extraction camps. They work not only on gas, but also on liquid fuel.
- **Mini plants** - are characterized by compact dimensions, which allows such a station to be located in close proximity to the consumer.



Stationary gas-turbine power plant



Mobile gas-turbine power plant

Comparison of gas turbine and gas piston power plants

Parameter	Gas reciprocating unit	Gas turbine system
Cost per kW of power	$400-600	$1000-1400
Economy of total heat and electricity, efficiency with cogeneration	High (up to 85%)	High (up to 85%)
Economy per KW, KPI for electricity	High 40-47%	Low 17-36%
The cost of maintenance	Normal	Normal
Quick start-up	Normal	Normal
Operating time before overhaul	60-80 thousand hours	30-60 thousand hours
Gas requirements	possible household pressure, less than 10 mbar	average pressure of about 16-20 bar
Environmental friendliness	High	High
Noise level	Low - when installing an additional muffler	Low

Gas turbine equipment should be chosen when there is limited space available to accommodate it. GTPP is suitable for small enterprises and commercial facilities where large power consumption capacity is not required and every square meter counts. If it is possible to allocate an area for the installation of equipment, it is more appropriate to choose a gas-piston power plant, because it has a lower cost, and the resource of GPU is slightly longer than that of GTU.

A gas turbine plant is more expensive than a gas piston plant.
High cost of equipment and limited choice is explained by a smaller number of GTU manufacturers, separate parts and spare parts are not cheap by themselves, due to which the cost of the plant increases.

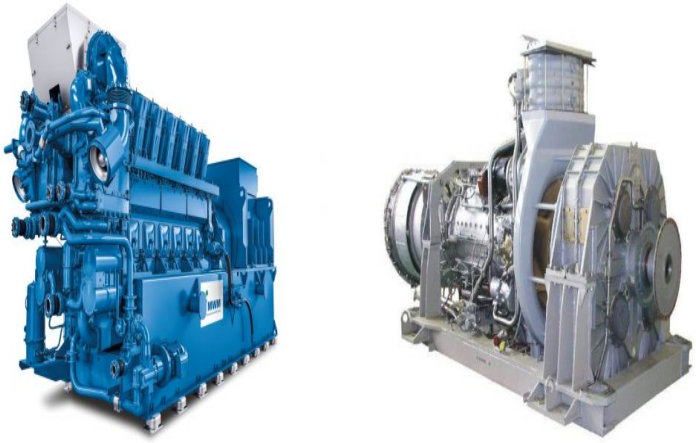

Physical form of MWM GPU and GTU

Gas piston units are more likely to require maintenance. You must change the oils and filters in them. But such a nuance can be compensated, if you install on the equipment additionally systems that will perform oil refilling and cleaning. In this case, the time between the performance of maintenance work increases.
On average, it can be about 3,000 hours, which means it is serviced once a quarter. In general, the resource of the GPU is slightly longer than that of the GTU.

In general, gas piston plants are attractive because they pay for themselves faster, no matter what the capacity of the power plant is.

The MKS Group is a leading engineering company in Russia, the main activity of which is the construction of small–scale energy facilities - turnkey gas piston power plants. In 19 years, it has commissioned 58 mini-thermal power plants in various regions of Russia and abroad.
The total capacity of all commissioned facilities of the MKS Group was 300 MW.
The MKS Group is the official Russian dealer and service partner of MWM Austria GmbH.